BOSSLASER

HAVE QUESTIONS?
(407) 878 - 0880

BOSS FM-STATION
SKU:BOSSFMX

20W X-SERIES
LASER POWER INCLUDED
30W, 50W & 100W ALSO AVAILABLE

Chuck Rotary Included

INDUSTRY LEADING
2 YEAR WARRANTY

FM-S INCLUDES:

- 20W Fiber Marking Power
- 4.33" X 4.33" Marking Area - Expanded Marking Area Optional
- Designed & Engineered In USA By Boss Laser
- EZ Guide™ Micro-Adjust Platform
- FM Rotary Chuck Options
- Flexible Open Marking Platform
- Reliable Speed & Precision - 100,000+ Hours
- Tech Support For Life Via. BOSS' In-House Laser Tech's And Engineers
- Warehoused Replacement Parts & Accessories For Quick Replacement
- Warranty - 2 Year Parts Includes Fiber Laser
- We 100% Guarantee With Our 30-Day Guarantee Return Policy

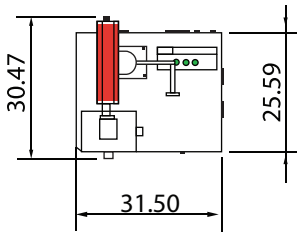

TOP VIEW

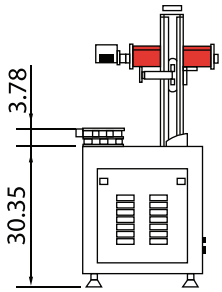

SIDE VIEW

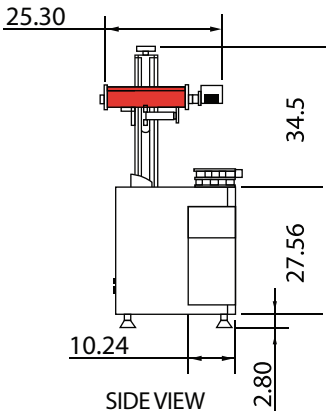

SIDE VIEW

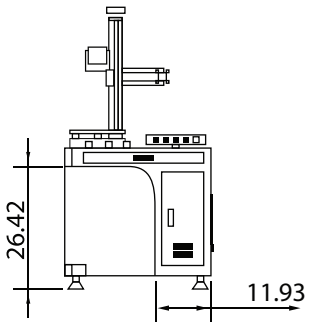

FRONT VIEW

BOSSLASER

HAVE QUESTIONS?

(407) 878 - 0880

BOSS FM-STATION

SKU:BOSSFMX

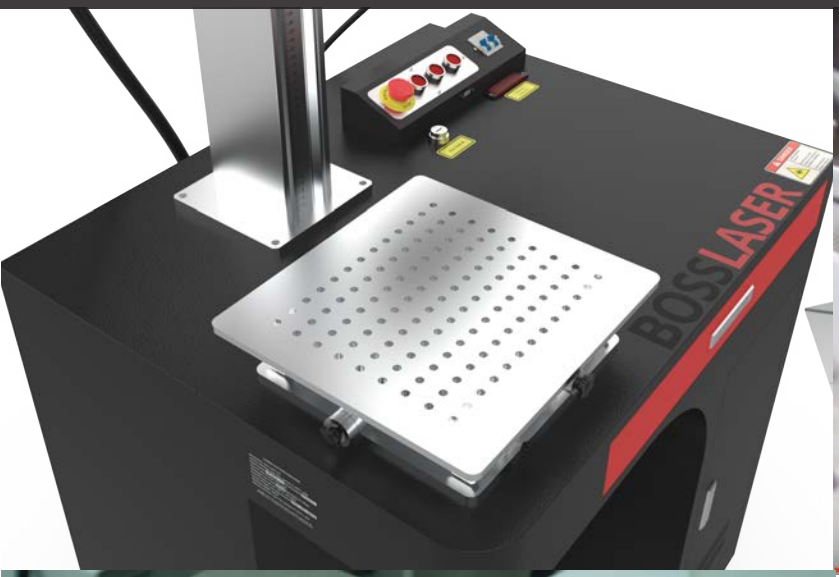

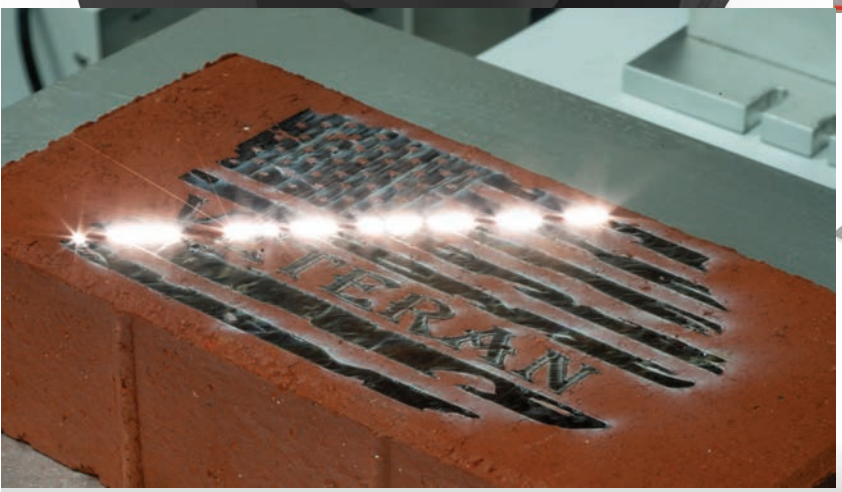

SPECIFICATIONS

Series	FM Series	**Pump Design**	Multi-channel diode
Speed	5,000MM / sec	**Image Formats**	Supports PLT, BMP, DXF, JPG,TIF, AI, PNG, etc.
Repeated Accuracy	0.002"	**Machine Dimensions**	30" deep X 30"L X 65"H
Beam Quality	Diffraction of M2 < 1.5 to 2.0	**Laser Wavelength**	1064NM
Power Supply	110V / 50HZ / 2KVA	**Fiber Power Options**	20W, 30W, 50W, or 100W
Net Weight	220 lbs.	**Cooling Method**	Forced air
Class	Class 4 Laser		

Call us if you would like to schedule a demo at our Sanford, FL location

BOSS LASER is an ISO-9001 Registered Company